DWG. NO.	SHT.	REV.
D0170074	1-1	D

REVISIONS

REV.	E.C.O.	DESCRIPTION	DATE	BY	APP'D
D	3675	CHANGE LIGHT	1/20/2012	GL	JK

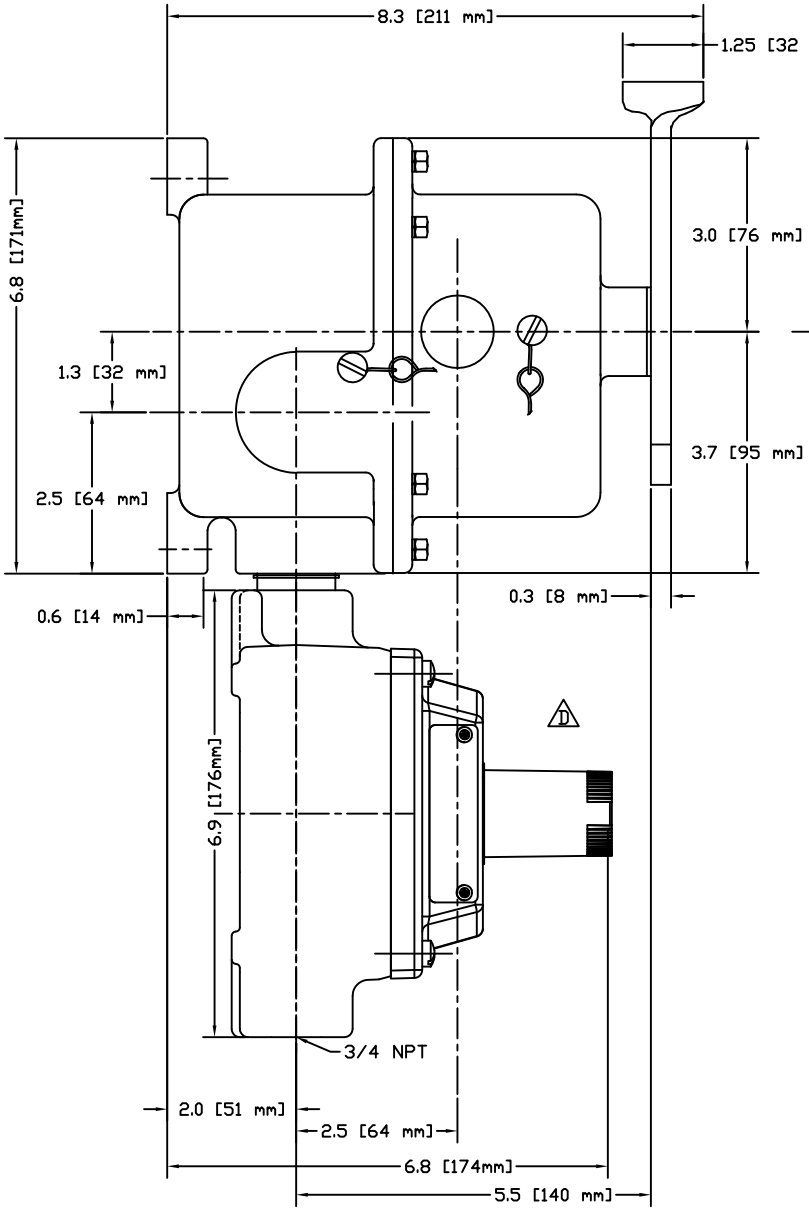

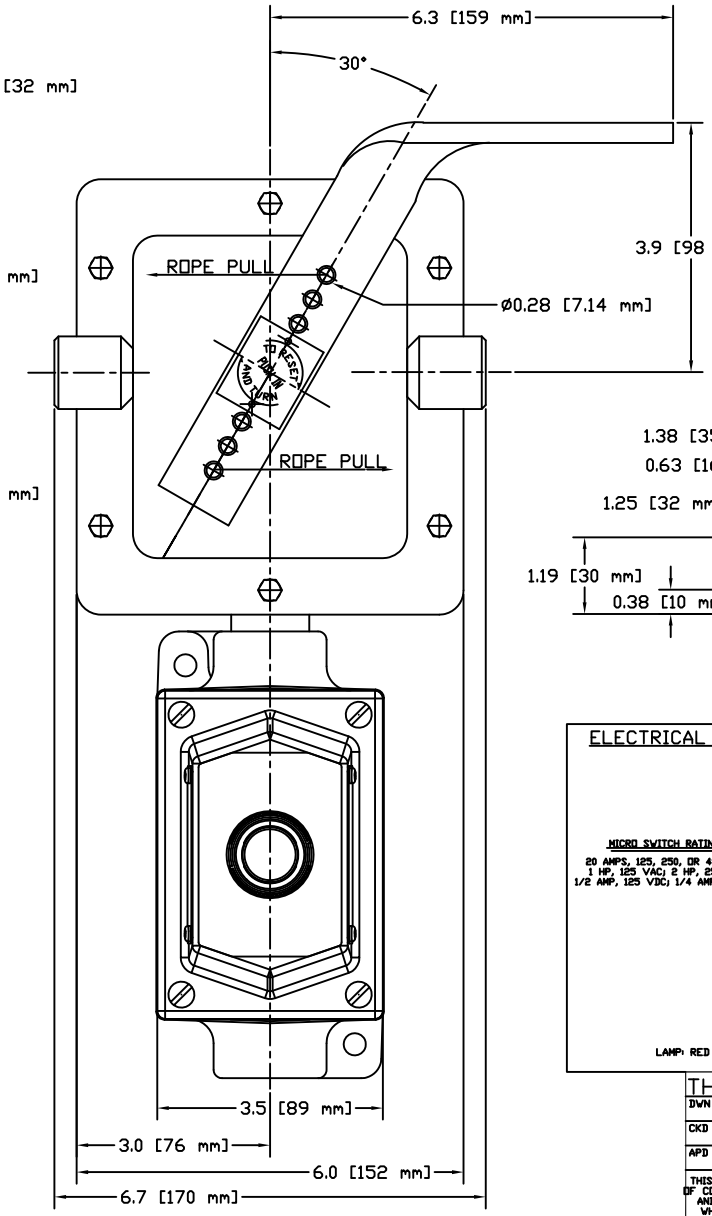

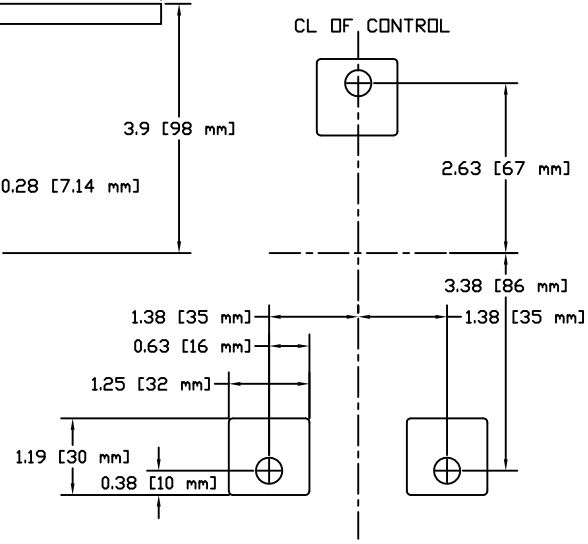

MOUNTING PLAN

ALL DIMS FOR REFERENCE ONLY.

ELECTRICAL DATA

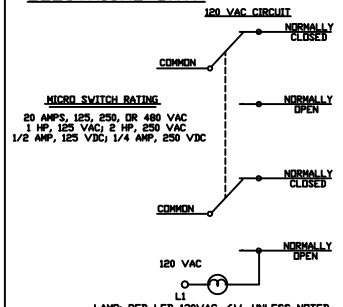

MICRO SWITCH RATING

20 AMPS, 125, 250, OR 480 VAC
1 HP, 125 VAC; 2 HP, 250 VAC
1/2 AMP, 125 VDC; 1/4 AMP, 250 VDC

LAMP: RED LED 120VAC, 6W, UNLESS NOTED.

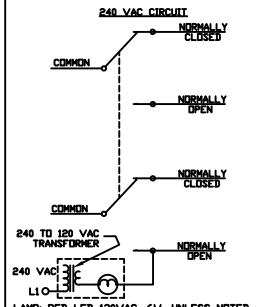

LAMP: RED LED 120VAC, 6W, UNLESS NOTED.

THIS DRAWING IS COMPUTER GENERATED.

DWN JK	DATE 6-4-90	CONVEYOR COMPONENTS CO. 130 SELTZER RD, CROSWELL, MI 48422
CKD	DATE	
APD JK	DATE 6-4-90	MODEL RS-2XL DIMENSIONAL DRAWING

THIS PRINT IS THE PROPERTY OF CONVEYOR COMPONENTS CO. AND MUST NOT BE USED IN WHOLE, OR PART WITHOUT WRITTEN PERMISSION.

PLEASE RETURN ON DEMAND.

PART NO.	DWG. NO.	REV.
	D0170074	D
SCALE NONE		SHT. 1-1

DWG. NO. D0170074 SHT. 1-1 REV. D